POST-FORMED HPL VANITY TOP
COUNTER TOP

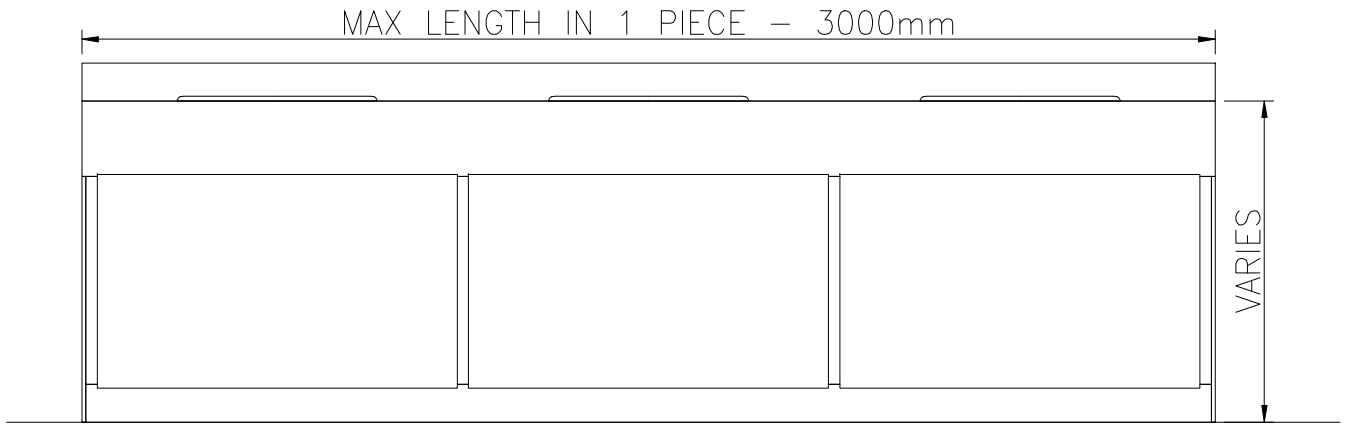

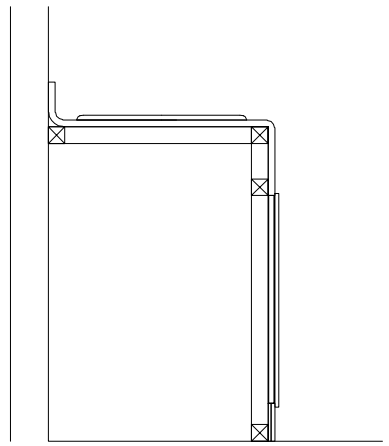

POST-FORMED HPL VANITY TOP
SEMI-RECESSED

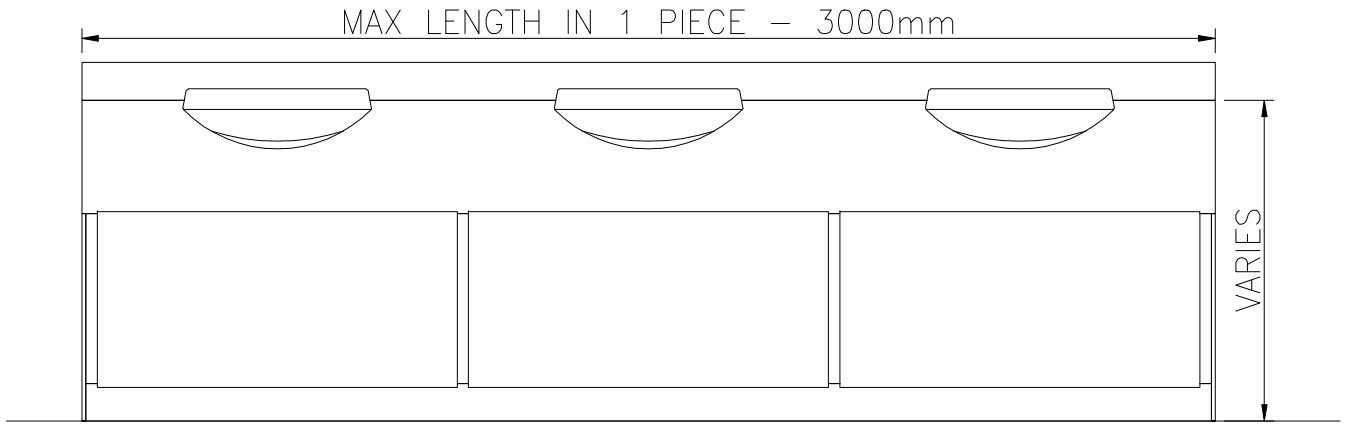

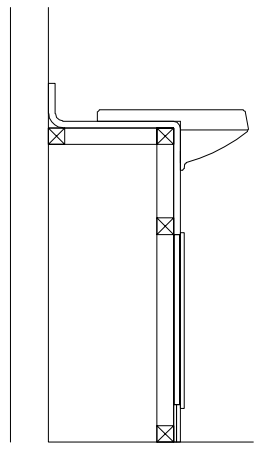

Cubicles Direct

Canklow Meadows Estate, West Bawtry Road,
Rotherham, S60 2XL, England
Tel: +44 (0)1709 388 338
Fax: +44 (0)1709 375 239
www.CubiclesDirect.co.uk

"This drawing is confidential and the property of Prospec Limited and should not be disclosed publicly without the prior permission of Prospec Limited. The obligation to keep the information in this drawing confidential extends until such time as the information falls into the public domain by publication made by or with permission of Prospec Limited".

NOTES :

A1